STEREO CASSETTE DECK

MODEL NO. AD-M800H,C,U,BU,G

AIWA®

[SERVICE MANUAL]

Code No. 04-800-000-69

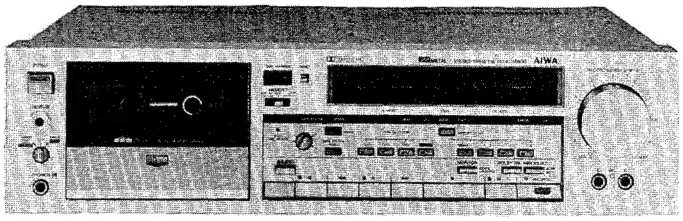

DATE OF ISSUE 10/1980

SPECIFICATIONS

Semiconductors: 53 ICs, 1 FET, 143 transistors, 98 diodes & 1 PIN diode, 27 LED's

Power supply:
H model
AC 120V/220V/240V
switchable 50/60 Hz
C,U,BU model
AC 120V, 60 Hz
G model
AC 120V/240V
switchable 50/60 Hz

Power consumption:
H,U,BU,G model
26W
C model
29W

Dimensions: 450(W) x 120(H) x 300(D) mm
[17-3/4"(W) x 4-3/4"(H) x 11-1/4"(D)]

Weight: 7.2 kg (15.86 lbs.)

Track type: 4 tracks 2 channel

Tape speed: 4.8 cm/s (1-7/8 ips) ± 1.5%

Wow and flutter: Less than 0.04% (WRMS)

Automatic stop system: Full auto stop

Automatic shut-off action time:
3 ± 1 s.

Pinch roller pressure: 450 ± 40 g (4.41 ± 0.39N)

Take-up torque: 50 ± 10g-cm (490 ± 98 mN·m)

FF & rewind time: 90 s. (C-60)

Play back output: (TTA-161) 0.58 ± 0.05V (LINE)

Play back noise:
Less than 1.1 mV
(METAL, CrO_2, Fe-Cr DOLBY NR ON)
Less than 2.2 mV
(LH DOLBY NR OFF)

Rec./PB output: (TTA-119G) 0 VU ± 1.5 dB (LINE)

Rec./Pb distortion:
Less than 1.0% (METAL)
Less than 1.2% (CrO_2)
Less than 1.0% (Fe-Cr)
Less than 1.5% (LH)

Rec./Pb noise: (Unweighted)
Less than 2.2/1.2 mV
(METAL, CrO_2, Fe-Cr DOLBY-NR OFF/ON)
Less than 2.8/1.4 mV (LH DOLBY-NR OFF/ON)

(Weighted-A)
Less than 1.1/0.5 mV
(METAL, CrO_2, Fe-Cr DOLBY-NR OFF/ON)
Less than 1.5/0.7 mV
(LH DOLBY-NR OFF/ON)

Channel separation: (1 kHz, 0 VU) More than 35 dB

Cross talk: (1 kHz, 0 VU) More than 60 dB

Erasing ratio: (400 Hz, 0 VU, +10 dB) More than 60 dB

Bias frequency: 105 kHz

Frequency response:

METAL	20 ~ 20,000 Hz
CrO_2	20 ~ 18,000 Hz
Fe-Cr	20 ~ 19,000 Hz
LH	20 ~ 17,000 Hz

Motor:
FG servo motor (capstan)
DC motor (reel)

Inputs:
MIC max. sensitivity 0.3 mV (200 Ω ~ 10 kΩ suitable)
LINE IN max. sensitivity 50 mV (Optimum load impedance more than 50 kΩ)

Outputs:
LINE OUT Standard level 0.41 V (0 VU) (Optimum load impedance more than 50 kΩ)
PHONES 8Ω ~ 150Ω, 2 mW (0 VU)

- Specifications and external appearance are subject to change without due to product improvement.
- Dolby Noise Reduction System is licensed from Dobly Laboratories.
- The name "Dolby" and DD symbol are trademarks of Dolby Laboratories.

Caution

- Remove the cassette compartment cover by first pushing upwards and then pulling out.
- When reattaching, align the compartment cover with the tabs and press as shown in the illustration.

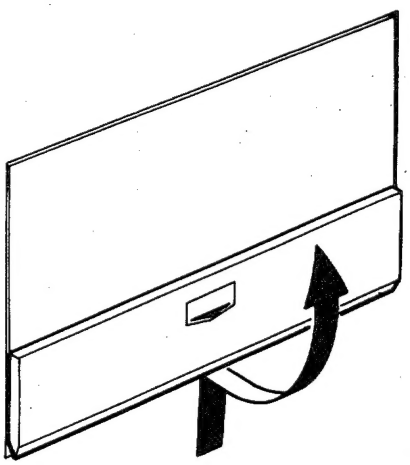

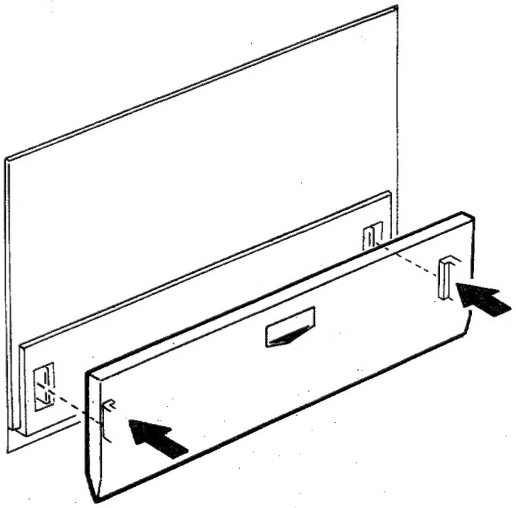

ACCESSORIES/PACKAGE

Ref. No.	Part No.	Part No. Changed to	Description	Common Model	Q'ty
1a	82-155-858-01		Printed indiv., Packing (H,C,G model only)	*	1
1b	82-155-854-01		Printed indiv., Packing (U model only)	*	1
1c	82-155-863-01		Printed indiv., Packing (BU model only)	*	1
2a	82-162-852-11		Cushion L, Printed indiv. (H,C,BU,G model only)	AD-R500	1
2b	82-155-860-11		Cushion L, Printed indiv. (U model only)	*	1
3a	82-162-853-01		Cushion R, Printed indiv. (H,C,BU,G model only)	AD-R500	1
3b	82-155-861-01		Cushion R, Printed indiv. (U model only)	*	1
4	87-051-131-11		Poly-vinyl sack (for AC power cord)		1
5	87-056-607-01		Poly-vinyl sack (for case)		1
6a	82-155-859-01		Support cushion (H,C,U,G model only)	*	1
6b	82-155-865-01		Support cushion (BU model only)	*	1
7a	82-155-906-11		Instrucions booklet (H,C model only)	*	1
7b	82-155-910-11		Instructions bookelt (U,BU model only)	*	1
7c	82-155-909-01		Instructions booklet (G model only)	*	1
8	87-051-132-11		Poly-vinyl sack		1
9	87-051-135-11		Poly-vinyl sack		1
10	87-051-175-01		Poly-tube A (for instruction)		1
11	87-056-009-41		Distributors list (H,C,G model only)		1
12a	87-056-013-01		Guarantee card (C model only)		1
12b	87-056-045-01		Guarantee card (U,BU model only)		1
12c	87-056-032-01		Guarantee card (G model only)		1
13	87-056-057-01		Service station list (U,BU model only)		1
14	82-155-081-01		Handle (BU model only)	*	2
15	82-155-951-11		Screw handle ass'y	*	1
16	86-944-012-01		Connection cord, CW-129BSK		2
17	87-032-845-01		Siemens plug (H model only)		1
18	87-056-050-01		Safety instruction (U,BU model only)		1
19	86-159-001-01		Remote control, RC-82		1
20	87-047-063-01		Battery, SUM-3AE		3

☆ ☆ ☆ ☆ ☆ ☆ ☆ ☆ ☆ ☆ ☆ ☆ ☆ ☆ ☆ **MEMO** ☆ ☆ ☆ ☆ ☆ ☆ ☆ ☆ ☆ ☆ ☆ ☆ ☆ ☆ ☆

EXPLODED VIEW–1

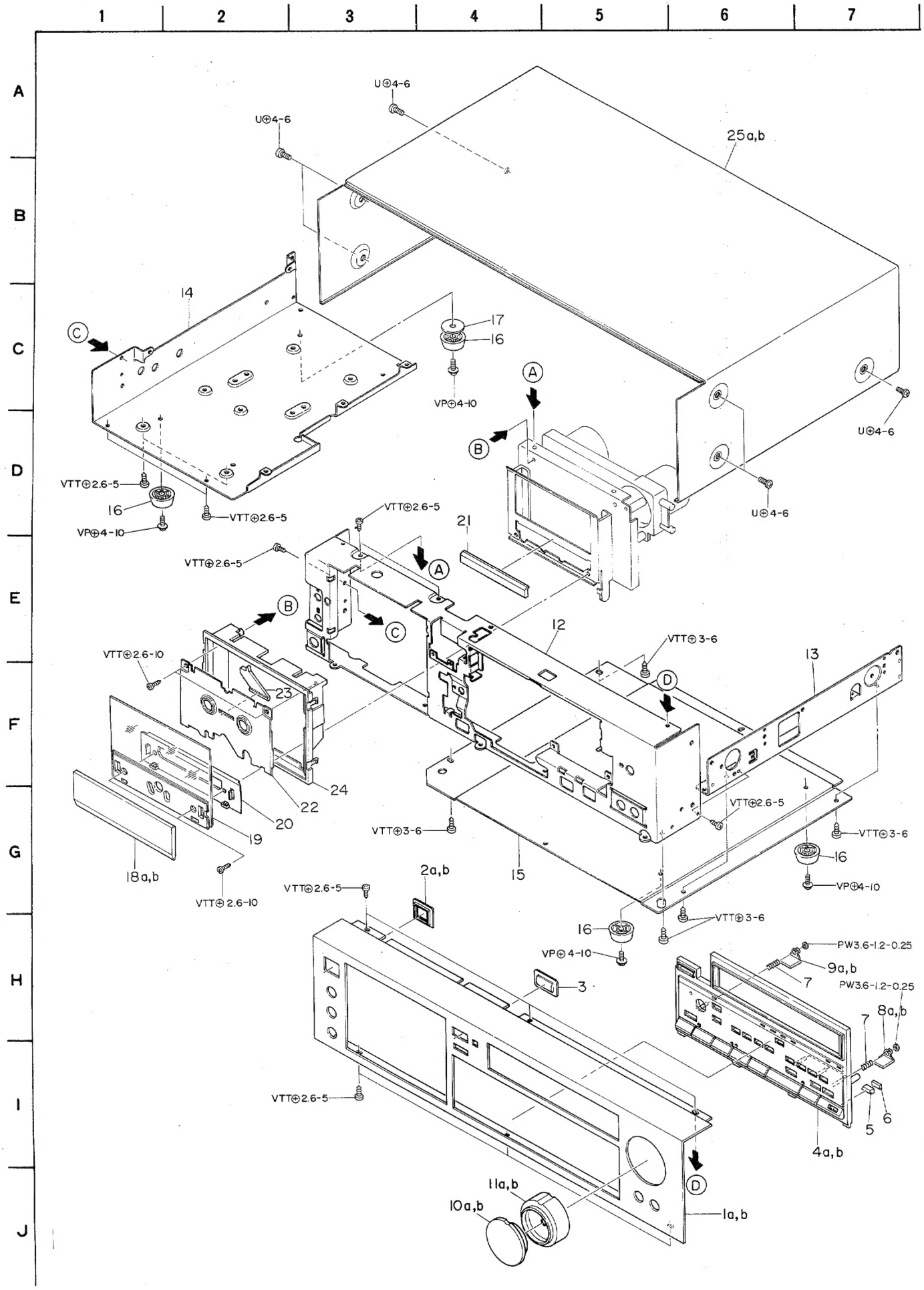

PARTS LIST

MECHANICAL PARTS

■ * mark in this part list shows exclusive part (which is used) for only Model No. AD-M800.

Ref. No.	Part No.	Part No. Changed to	Description	Common Model	Q'ty
1-1a	82-155-055-01		Panel, Front E (H,C,U,G model only)	*	1
1-1b	82-155-064-01		Panel, Front BU (BU model only)	*	1
1-2a	82-318-014-01		Guide, Power button (H,C,U,G model only)	AD-M600	1
1-2b	82-154-042-01		Guide, Power button (BU model only)	AM-M700	1
1-3	82-155-061-01		Window B, Counter	*	1
1-4a	09-047-187-01		Control panel ass'y (H,C,U,G model only)	*	1
	82-155-019-01		Guide, Control panel	*	1
	82-155-062-01		Control panel E	*	1
	82-155-063-01		Plate, LED	*	1
	82-155-030-01		Touch-key, Dummy	*	1
	82-155-024-01		Touch-key, PLAY	*	5
	82-155-025-01		Touch-key, STOP	*	1
	82-155-031-01		Touch-key, REC mute	*	1
1-4b	09-047-188-01		Control panel ass'y (BU model only)	*	1
	82-155-067-01		Guide, Control panel	*	1
	82-155-065-01		Control panel BU	*	1
	82-155-085-01		Plate, LED	*	1
	82-155-079-01		Touch-key, Dummy	*	1
	82-155-077-01		Touch-key, PLAY	*	5
	82-155-078-01		Touch-key, STOP	*	1
	82-155-080-01		Touch-key, REC mute	*	1
1-5	82-155-033-01		Knob, REC mute	*	1
1-6	82-155-218-01		S cushion, REC mute	*	1
1-7	82-155-214-01		C-spring, Eject	*	4
1-8a	82-155-017-01		Knob, Dolby (H,C,U,G model only)	*	3
1-8b	82-155-075-01		Knob, Dolby (BU model only)	*	3
1-9a	82-155-018-01		Knob, Eject (H,C,U,G model only)	*	1
1-9b	82-155-076-01		Knob, Eject (BU model only)	*	1
1-10a	82-155-005-01		Knob REC B ass'y (H,C,U,G model only)	*	1
1-10b	82-155-071-01		Knob REC B ass'y (BU model only)	*	1
1-11a	82-155-002-01		Knob REC A ass'y (H,C,U,G model only)	*	1
1-11b	82-155-069-01		Knob REC A ass'y (BU model only)	*	1
1-12	82-155-201-01		Chassis, Front	*	1
1-13	82-321-220-01		Amp. chassis B2		1
1-14	82-155-220-01		Amp. chassis A3	*	1
1-15	82-318-002-01		Cabinet, Bottom	AD-M600	1
1-16	87-085-161-01		Foot		4
1-17	82-154-223-01		G cushion, Foot	AD-M700	1
1-18a	82-155-013-01		Cassette lid (H,C,U,G model only)	*	1
1-18b	82-155-082-01		Cassette lid (BU model only)	*	1
1-19	82-155-014-01		Window, Cassette	*	1
1-20	82-155-039-01		Blind cassette	*	1
1-21	82-155-042-01		Name, Cassette lid	*	1
1-22	82-155-037-01		Plate, Cassette	*	1
1-23	82-154-015-01		Guide, Right	AD-M700	1
1-24	82-155-023-01		Blinder	*	1
1-25a	82-155-016-01		Cabinet, Steel (H,C,U,G model only)	*	1
1-25b	82-155-066-01		Cabinet, Steel (BU model only)	*	1
[U model only]					
	82-162-032-01		Side board L ass'y (U model only)	AD-R500	1
	82-155-058-01		Side board R ass'y (U model only)	*	1
	87-259-178-01		U + 4 – 25 (U model only)		6

EXPLODED VIEW–2

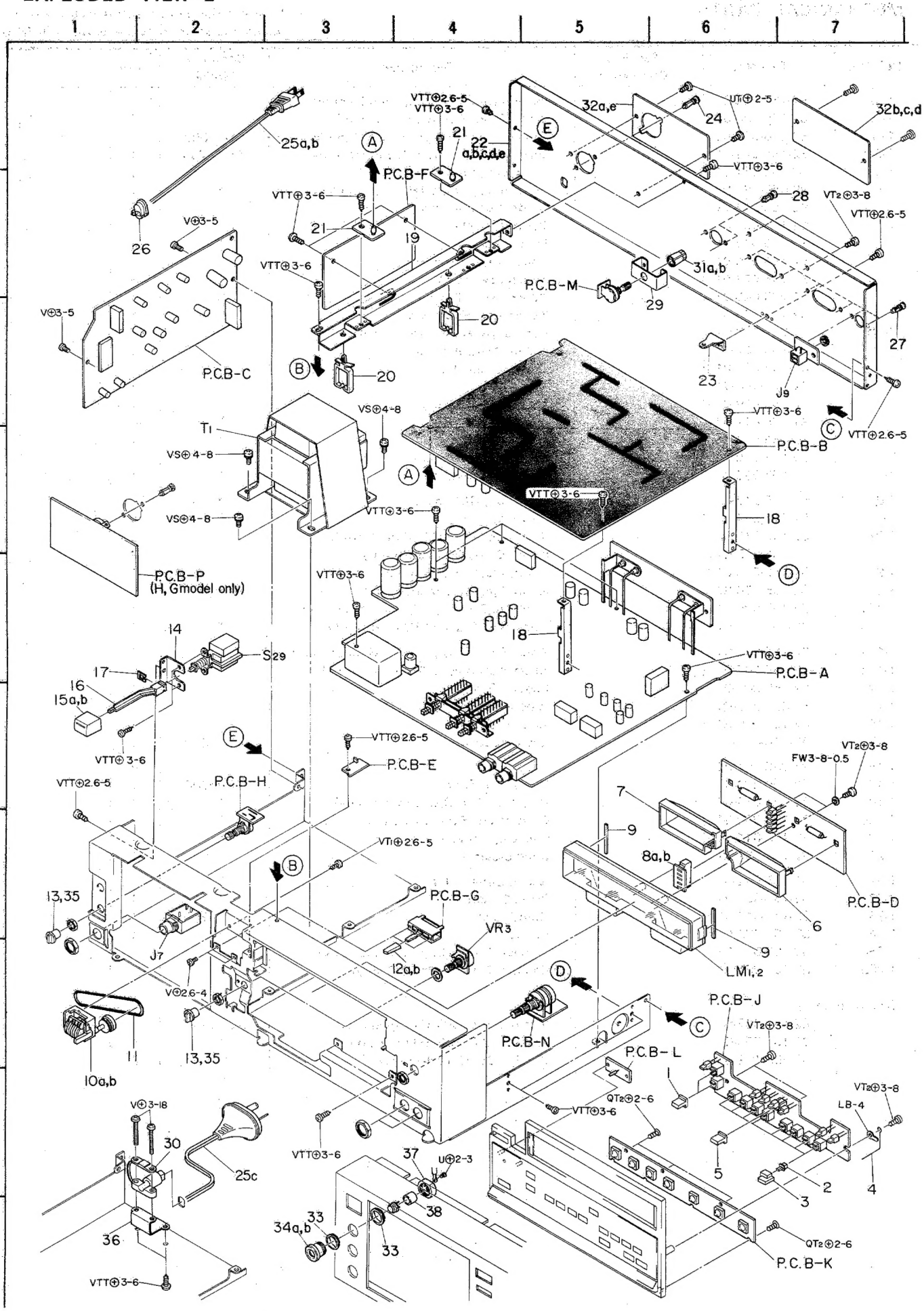

Ref. No.	Part No.	Part No. Changed to	Description	Common Model	Q'ty
2-1	82-155-020-01		Knob, Control A	*	2
2-2	82-155-022-01		Guide, Light	*	8
2-3	82-155-021-01		Knob, Control B	*	8
2-4	82-155-221-01		T-spring, Earth	*	1
2-5	82-155-038-01		Knob, Control C	*	1
2-6	82-155-212-01		Lamp cover R	*	1
2-7	82-155-211-01		Lamp cover L	*	1
2-8a	82-155-205-01		Guide, LED (H,C,U,G model only)	*	1
2-8b	82-155-087-01		Guide, LED (BU model only)	*	1
2-9	82-155-219-01		S cushion, Meter	*	2
2-10a	87-040-128-01		Counter (H,C,U,G model only)		1
2-10b	87-040-141-01		Counter (BU model only)		1
2-11	82-385-253-01		Belt L, Counter	AD-6300	1
2-12a	82-155-009-01		Knob, Slide switch B (H,C,U,G model only)	*	1
2-12b	82-155-074-01		Knob, Slide switch B (BU model only)	*	3
2-13	82-155-008-01		Knob, PB (H,C,U,G model only)	*	2
2-14	82-318-205-01		Holder, Power	AD-M600	1
2-15a	82-318-025-01		Push-button, Power (H,C,U,G model only)	AD-M600	1
2-15b	82-154-030-01		Push-button, Power (BU model only)	AD-M700	1
2-16	82-304-210-01		Rod power	AD-6900	
2-17	82-385-383-01		Stopper rod	AD-6300	1
2-18	82-155-202-01		Holder, Microprocessor circuit board	*	2
2-19	82-155-217-01		Amp. chassis	*	1
2-20	87-038-052-01		Wire crip	*	2
2-21	87-064-056-01		Hinge, Circuit board		2
2-22a	82-155-043-01		Panel, Rear (H model only)	*	1
2-22b	82-155-044-01		Panel, Rear (C model only)	*	1
2-22c	82-155-047-01		Panel, Rear (U model only)	*	1
2-22d	82-155-068-01		Panel, Rear (BU model only)	*	1
2-22e	82-155-048-01		Panel, Rear (G model only)	*	1
2-23	82-318-203-01		Holder, Circuit board	AD-M600	1
2-24	87-085-090-01		Nylon rivet (H,G model only)		2
2-25a	87-034-826-01		AC power cord (H model only)		1
2-25b	87-034-951-01		AC power cord (C,U,BU model only)		1
2-25c	87-034-892-01		AC power cord (G model only)		1
2-26	87-085-165-01		Cord bushing (H,C,U,BU model only)		1
2-27	87-085-102-01		Nylon rivt 3.5-5.5		6
2-28	87-085-080-01		Nylon rivet		2
2-29	82-155-216-01		Holder, PB	*	1
2-30	87-085-166-01		Holder, AC power cord (G model only)		1
2-31a	82-155-057-01		Knob, Tone (H,C,U,G model only)	*	1
2-31b	82-155-084-01		Knob, Tone (BU model only)	*	1
2-32a	82-155-049-01		Name plate, Spec. (H model only)	*	1
2-32b	82-155-050-01		Name plate, Spec. (C model only)	*	1
2-32c	82-155-053-01		Name plate, Spec. (U model only)	*	1
2-32d	82-155-083-01		Name plate, Spec. (BU model only)	*	1
2-32e	82-155-054-01		Name plate, Spec. (G model only)	*	1
2-33a	82-307-026-01		Guide, Pipe (H,C,U,G, model only)	AD-6700	2
2-33b	82-153-035-01		Guide, Pipe (BU model only)	AD-6900II	2
2-34a	82-155-056-01		Pipe A2 (H,C,U,G model only)	*	1
2-34b	82-153-034-01		Pipe A (BU model only)	AD-6900II	1
2-35	82-157-042-01		Knob, Timer (BU model only)	SD-L50	2
2-36	82-397-244-01		Holder, AC power cord (G model only)	AD-6550	1
2-37	82-307-235-01		Nut	AD-6700	1
2-38	82-307-234-01		G cushion	AD-6700	1

EXPLODED VIEW–3

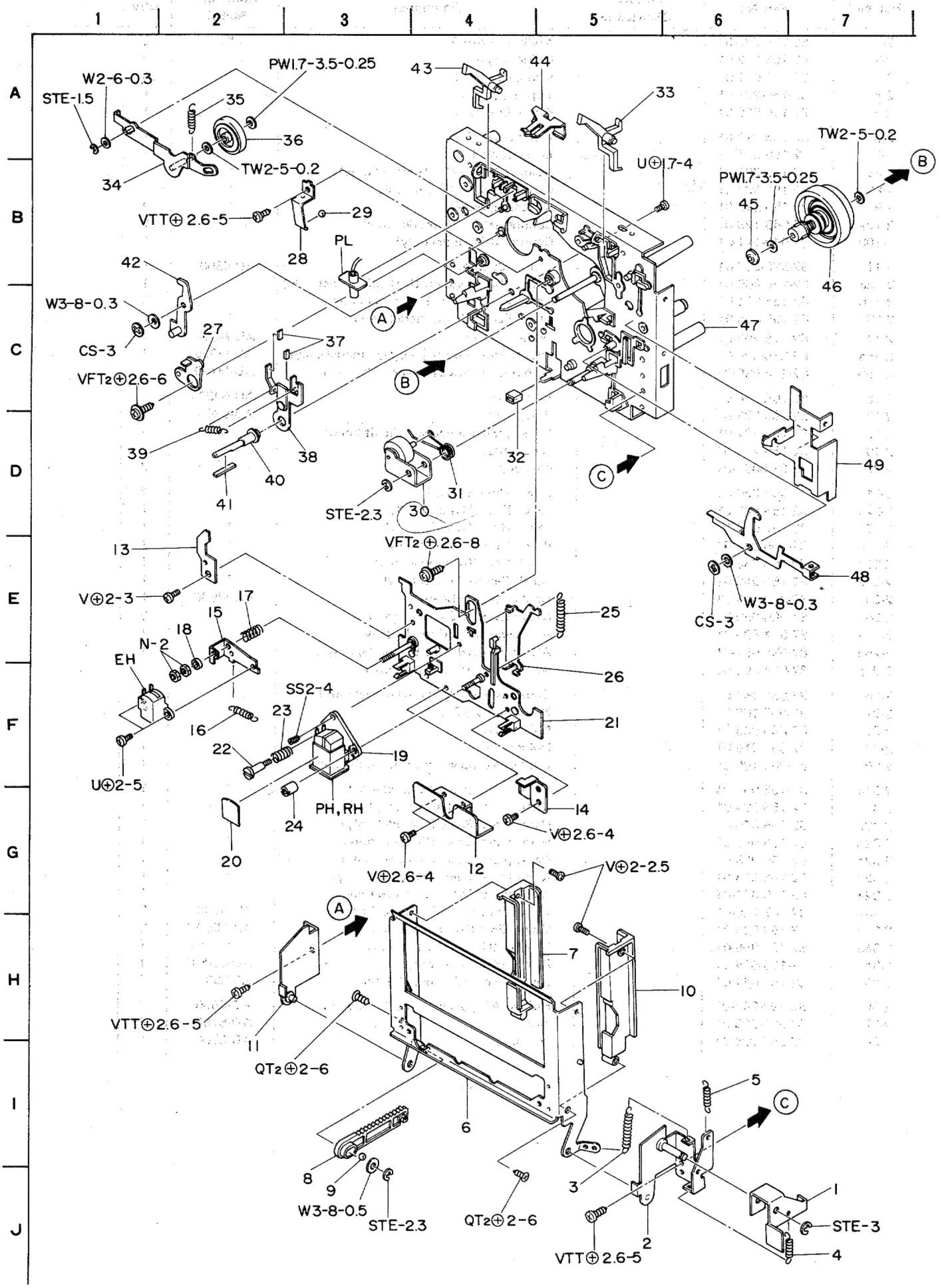

Ref. No.	Part No.	Part No. Changed to	Description	Common Model	Q'ty
3-1	82-155-204-01		Lever, Eject	*	1
3-2	82-319-220-01		Holder C, Box R ass'y	AD-M600	1
3-3	82-319-230-01		E-spring, Cassette lid	AD-M600	1
3-4	82-155-215-01		E-spring, Eject lever	*	1
3-5	82-392-374-01		E-spring, Pause A	AD-6550	1
3-6	82-155-206-01		Cassette box ass'y	*	1
3-7	82-155-040-01		Holder L2, Cassette	*	1
3-8	82-541-240-01		Lever, Oil damper	TPR-950	1
3-9	82-073-005-01		Steel ball 2ϕ		1
3-10	82-155-041-01		Holder R2, Cassette	*	1
3-11	82-319-223-01		Holder C, Box L ass'y	AD-M600	1
3-12	82-397-291-01		Shield plate, Head	AD-6550	1
3-13	82-319-209-01		Guide, Idler lever	AD-M600	1
3-14	82-303-294-01		Holder, T-spring	AD-6900	1
3-15	82-303-374-01		Holder, EH	AD-6900	1
3-16	82-154-220-01		E-spring, EH	AD-M700	1
3-17	82-154-209-01		C-spring, EH	AD-M700	1
3-18	82-303-371-01		Collar, EH	AD-6900	1
3-19	82-155-615-01		Head combination	*	1
3-20	82-304-069-01		Label, Head	AD-6900	1
3-21	09-047-181-01		Out-sert actuating chassis ass'y	*	1
3-22	82-304-289-01		Screw, RPH	AD-6900	1
3-23	82-392-357-01		C-spring, Head	AD-6550	1
3-24	82-304-317-01		Nut, Azimuth	AD-6900	1
3-25	82-155-222-01		E-spring, Actuating	*	1
3-26	82-319-210-01		Slide plate, Actuating	AD-M600	1
3-27	82-303-288-01		Lever, Actuating lock	AD-6900	1
3-28	82-319-215-01		P-spring, Actuating A	AD-M600	1
3-29	82-215-341-01		Steel ball 3/32		1
3-30	82-319-270-01		Pinch roller ass'y	AD-M600	1
3-31	82-303-316-01		T-spring, Pinch lever	AD-M600	1
3-32	82-397-307-01		G cushion, Eject lever	AD-6550	1
3-33	82-303-349-01		Lever, CrO_2	AD-6900	1
3-34	82-303-342-01		Play idler lever ass'y	AD-6900	1
3-35	82-303-325-01		E-spring, Play idler	AD-6900	1
3-36	82-303-274-01		Play idler ass'y	AD-6900	1
3-37	82-303-382-01		Felt, Sub brake	AD-6900	2
3-38	82-319-259-01		Lever, Back tension ass'y	AD-M600	1
3-39	82-154-221-01		E-spring, Back tension	AD-M700	1
3-40	82-154-212-01		Shaft, Tension	AD-M700	1
3-41	82-303-372-01		Felt, EH	AD-6900	1
3-42	82-319-235-01		Lever, PAC ass'y	AD-M600	1
3-43	82-303-346-01		Lever, REC blocking	AD-6900	1
3-44	82-319-214-01		P-spring, Cassette	AD-M600	1
3-45	82-303-398-01		Take up reel platform cap	AD-6900	1
3-46	82-303-249-01		Take up reel platform ass'y	AD-6900	1
3-47	09-047-175-01		Main chassis ass'y	*	1
3-48	82-319-211-01		Lever, Play switch	AD-M600	1
3-49	82-155-210-01		Lock lever	*	1

EXPLODED VIEW–4

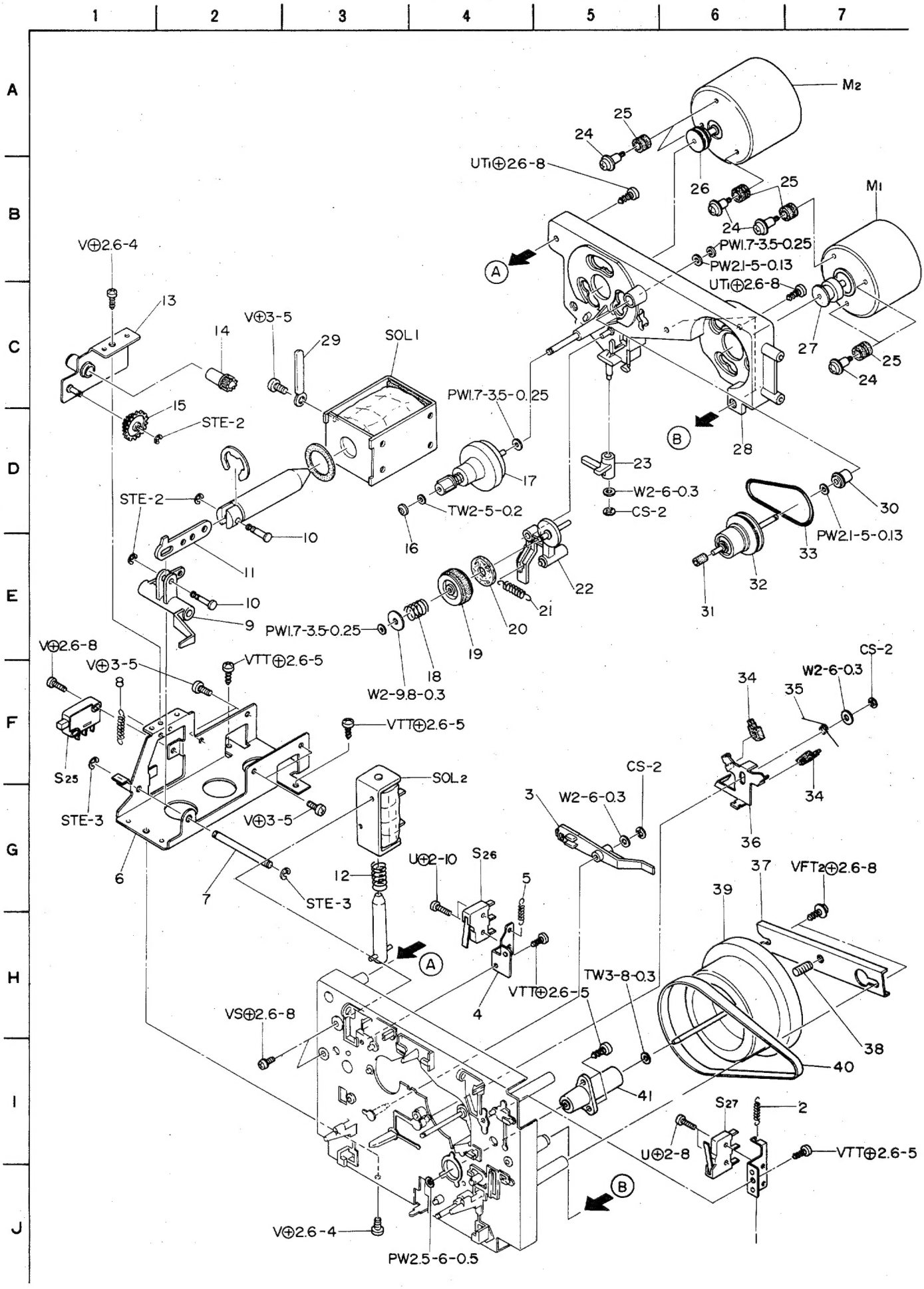

Ref. No.	Part No.	Part No. Changed to	Description	Common Model	Q'ty
4-1	82-319-241-01		Holder, CrO_2	AD-M600	1
4-2	82-319-251-01		E-spring, CrO_2	AD-M600	1
4-3	82-303-286-01		Lever, Brake	AD-6900	1
4-4	82-303-350-01		Holder, REC blocking	AD-6900	1
4-5	82-319-234-01		E-spring, REC blocking	AD-M600	1
4-6	82-319-207-01		Holder, Plunger	AD-M600	1
4-7	82-304-244-01		Shaft, Play lever	AD-6900	1
4-8	82-304-249-01		E-spring, Actuating	AD-6900	1
4-9	82-304-232-01		Lever, Play	AD-6900	1
4-10	82-319-269-01		Shaft, Plunger	AD-M600	1
4-11	82-319-250-01		Slide plate, Play B	AD-M600	1
4-12	82-481-311-01		C-spring, Plunger	AF-3090	1
4-13	82-319-225-01		Holder, Oil damper ass'y	AD-M600	1
4-14	82-534-264-01		Gear, Oil damper		
4-15	82-319-239-01		Gear, Oil	AD-M600	1
4-16	82-303-398-01		Take up reel platform cap	AD-6900	1
4-17	82-154-216-01		Supply reel platform ass'y	AD-M700	1
4-18	82-303-322-01		C-spring, FR idler	AD-6900	1
4-19	82-303-271-01		Idler pulley FR ass'y	AD-6900	1
4-20	82-303-335-01		Felt 6.4-14	AD-6900	1
4-21	82-303-353-01		E-spring, FR lever	AD-6900	1
4-22	82-303-277-01		FR lever ass'y	AD-6900	1
4-23	82-303-292-01		Lever, Eject	AD-6900	1
4-24	87-081-483-01		Motor screw M2.6		6
4-25	82-439-319-01		Rubber cushion B	TPR-300	6
4-26	82-319-247-01		Motor pulley, FR	AD-M600	1
4-27	82-319-248-01		Motor pulley, Flywheel A	AD-M600	1
4-28	09-047-152-01		Sub chassis ass'y	*	1
4-29	87-064-080-01		Wire binder		1
4-30	82-439-410-01		Shaft bearing 2ϕ	TPR-300	1
4-31	82-303-309-01		Drive rubber	AD-6900	1
4-32	82-303-330-01		Slip pulley ass'y	AD-6900	1
4-33	82-303-385-01		Rubber belt FR B	AD-6900	1
4-34	82-439-426-01		Brake shoe A	TPR-300	2
4-35	82-303-318-01		T-spring, Brake	AD-6900	1
4-36	82-303-297-01		Slide plate, Brake	AD-6900	1
4-37	82-319-238-01		Plate, Flywheel	AD-M600	1
4-38	82-331-107-01		Thrust screw		1
4-39	82-154-218-01		Flywheel ass'y	AD-M700	1
4-40	82-319-227-01		Rubber belt, Flywheel	AD-M600	1
4-41	82-392-256-01		Shaft bearing ass'y	AD-6550	1

801025 (1)-Z

AIWA CO., LTD.

Printed in Japan

ELECTRICAL MAIN PARTS LIST

Symbol No.	Part No.	Description
≪MAIN CIRCUIT BOARD SECTION≫		
PCB-A	82-155-602-11	Maincircuit board (H,C,G model)
PCB-A	82-155-677-01	Main circuit board (U,BU model)
IC101,102	87-027-557-01	IC, CX174
303,304		
IC151	87-027-382-01	IC, LA4170
IC301,354	87-027-371-01	IC, 4558DA
356,358		
IC351	87-027-611-01	IC, TC4051
IC352,353	87-027-677-01	IC, LF353N *
355,359		
IC357	87-027-678-01	IC, LM13600N *
IC701	87-027-567-01	IC, HD74LS26P
Q101,102	89-107-505-01	Transistor, 2SA750(E)
Q103,104,105	89-309-456-01	Transistor, 2SC945L(P)
106,107,108		
151,152,301		
302,305,306		
307,308,309		
310,311,312		
315,316,505		
508,702,703		
704,705,706		
707,708,709		
710,713,715		
801,802,803		
Q109,110,111	89-320-011-01	Transistor, 2SC2001(K)
112,113,114		
303,304,313		
314		
Q401	89-314-005-01	Transistor, 2SC1400(E)
Q501	89-205-964-01	Transistor, 2SB596(Y)
Q502,601	89-408-804-01	Transistor, 2SD880(Y)
Q503	89-318-156-01	Transistor, 2SC1815(BL)
Q504	89-110-155-01	Transistor, 2SA1015(GR)
Q506,507,711	89-107-336-01	Transistor, 2SA733(P)
712,714		
Q602,603	89-407-624-01	Transistor, 2SD762(P)
Q701	89-206-051-01	Transistor, 2SB605(K)
D101,102,301	87-027-097-01	Diode, 1S1555
302,503,504		
505,506,507		
702,703,704		
803,804,805		
806,808		
D303,304,305	82-155-640-01	Varactor diode, KV-1236
306		
D501,601	87-027-163-01	Encapsulated diode 1B4B1
D502	87-027-680-01	Zener diode, HZ11C1L
D602	87-027-479-01	Zener diode, HZ27-2
D701	87-027-471-01	Zener diode, HZ-161
D801	87-027-365-01	Diode, S5277B
D802,807,809	87-027-286-01	Zener diode, HZ-5C1
D401	87-027-436-01	Zener diode, HZ11B1
L101,102	82-938-640-01	Bias trap coil, 10mH
L301,302	82-304-701-01	Bias trap coil, 22mH
CP301,302	82-155-639-01	Photo couppler
CP701	82-328-602-01	Bias OSC unit
J1,2	82-155-642-01	Jack, 6.3φ (MIC, L, R)

Symbol No.	Part No.	Description
J3,4,5,6	82-309-639-01	Pin jack Ass'y (LINE IN/REC, LINE OUT/PLAY)
LPF301,302	87-030-060-01	Low pass filter, 100kHz
S1,2,3	82-155-645-01	Push-switch (MPX FILTER, DOLBY-NR, MONITOR)
SFR101,102	87-021-615-01	Semi-fixed resistor, 47kΩ-B
103,104		
PIN-3,4	87-032-903-01	Pin, 3P
PIN-2	87-032-904-01	Pin, 4P
PIN-5	87-032-908-01	Pin, 6P
		< Resistors >
⚠ R501,502	87-029-070-01	2.2Ω ¼W Fuse resistor (H,C,U model)
⚠ R602	87-029-067-01	4.7Ω ¼W Fuse resistor
⚠ R514,515,606	87-029-017-01	10Ω ¼W Fuse resistor
⚠ R601	87-029-016-01	22Ω ¼W Fuse resistor
R111,112	87-025-294-01	3.6kΩ ¼W ±1% Metal film resistor
R155,156,353	87-025-281-01	6.2kΩ ¼W ±1% Metal film resistor
354		
		< Capacitors >
C303,304	87-015-242-01	2.2μF 50V Electrolytic LL
C151,152,307	87-015-453-01	2.2μF 25V Electrolytic BP
308		
C133, 134,319	87-015-464-01	4.7μF 16V Electrolytic BP
320,359,360		
C355,356,357	87-015-668-01	22μF 16V Electrolytic BP
358,369,370		
C113,114,343	87-015-141-01	10μF 16V Electrolytic BP
344		
C119,120	87-014-073-01	4700pF ±2% PP
C135,136,323	87-014-116-01	0.0068μF ±2% PP
324		
C137,138,325	87-014-118-01	0.015μF ±2% PP
326		
C365,366	87-014-122-01	0.018μF ±2% PP
C109,110	87-014-119-01	0.027μF ±2% PP
C139,140,327	87-014-120-01	0.056μF ±2% PP
328		
≪MICROPROCESSER CIRCUIT BOARD SECTION≫		
PCB-B	82-155-623-21	Microprocesser circuit board (H,C,G model)
PCB-B	82-155-622-01	Microprcesser circuit board (U,BU model)
IC1	82-155-616-01	IC, μCOM43-546C155
IC2,9~13	87-027-371-01	IC, 4558DA
22		
IC3	87-027-567-01	IC, HD74LS26P
IC4	87-027-657-01	IC, TC4028BP
IC5,6,7	87-027-597-01	IC, HD74LS75P
IC8,17	87-027-565-01	IC, CMOS TC4081BP
IC14	87-027-630-01	IC, DAC)808LCN
IC15,18,19	87-027-656-01	IC, TC4066BP
IC16,20,21	87-027-598-01	IC, TC4042BP
IC23	87-027-672-01	IC, TMM142P
IC24	87-027-673-01	IC, T3541A
IC25	87-027-729-01	IC, MB4049B

Symbol No.	Part No.	Description
Q1	89-407-624-01	Transistor, 2SD762(P)
Q2	89-108-854-01	Transistor, 2SA885(R)
Q3,4~10,15	89-107-336-01	Transistor, 2SA733(K)
23,32,35,36		
43		
Q5,11,13,14	89-309-456-01	Transistor, 2SC945L(P)
16~22,24		
25,26,27		
37~42		
Q12,31	89-110-155-01	Transistor, 2SA1015(GR)
Q28	89-406-555-01	Transistor, 2SD655(E)
Q29	89-500-305-01	FET, 2SK30A
Q30	89-318-155-01	Transistor, 2SC1815(GR)
Q33,34	89-318-154-01	Transistor, 2SC1815(Y)
D1	88-052-188-01	Diode, 1S188(FM)
D2,11~14	87-027-097-01	Diode, 1S1555
16~22		
25~36		
D3	87-027-649-01	Zener diode, HZ-7A2
D4~8	87-027-365-01	Diode, S5277B
D9	87-027-675-01	Zener diode, HZ33-3L
D10	87-027-390-01	Zener diode, HZ24-3L
D15	87-027-676-01	Zener diode, HZ12B3L
D23	87-027-301-01	Zener diode, HZ3A1
D24	87-027-584-01	Zener diode, HZ9LC1
X1	87-008-186-01	Ceramic, CSB400R1
SFR1	87-021-610-01	Semi-fixed resistor, 2.2kΩ-B
SFR2,3	87-021-615-01	Semi-fixed resistor, 47kΩ-B
SFR4	87-021-304-01	Semi-fixed resistor, 5kΩ-B
PIN-10	87-032-903-01	Pin, 3P
PIN-6	87-032-904-01	Pin, 4P
PIN-7	87-032-905-01	Pin, 5P
PIN-9,11,14	87-032-906-01	Pin, 6P
PIN-8	87-032-907-01	Pin, 7P
PIN-12	87-032-909-01	Pin, 9P
PIN-13	87-032-912-01	Pin, 12P
		< Resistors >
⚠ R193,194	87-029-017-01	10Ω ¼W Fuse resistor
⚠ R198,199	87-029-017-01	10Ω ¼W Fuse resistor (C,G model)
R45,46,47,	82-155-624-01	220Ω×4 100kΩ ¼W Resistor
48,96		block
R131	87-025-276-01	1kΩ ¼W ±1% Metal film resistor
R139	87-025-278-01	3kΩ ¼W ±1% Metal film resistor
R106	87-025-292-01	6.8kΩ ¼W ±1% Metal film resistor
R90,94,95	87-025-282-01	10kΩ ¼W ±1% Metal film resistor
118		
R105,135,140	87-025-283-01	12kΩ ¼W ±1% Metal film resistor
R130	87-025-284-01	18kΩ ¼W ±1% Metal film resistor
R117,119,120,	87-025-285-01	20kΩ ¼W ±1% Metal film resistor
121		
R133	87-025-289-01	56kΩ ¼W ±1% Metal film resistor
≪LOGIC CIRCUIT BOARD SECTION≫		
PCB-C	82-155-609-21	Logic circuit board (H,C,G model)
PCB-C	82-155-683-01	Logic circuit board (U,BU model)

Symbol No.	Part No.	Description
IC1	87-027-477-01	IC, TC-9121P
IC2	87-027-595-01	IC, TC-4023BP
IC3	87-027-435-01	IC, MC-4069
Q1~3,5	89-309-455-61	Transistor, 2SC945L(PQ)
13~15		
20~24		
Q4,6	89-107-335-61	Transistor, 2SA733(K,P)
Q7,16,25	89-318-464-51	Transistor, 2SC1846(R,S)
Q17	89-318-464-51	Transistor, 2SC1846(RS) (H,U,BU model)
Q17	89-408-804-01	Transistor, 2SD880(Y) (C,G model)
Q8,9	89-106-834-51	Transistor, 2SA683 (RS)
Q10,11,19	89-313-834-01	Transistor, 2SC1383(S)
Q12	89-407-624-01	Transistor, 2SD762(P)
Q18	89-108-854-51	Transistor, 2SA885(RS)
D1~18	87-027-097-01	Diode, 1S1555
D19~22	87-027-365-01	Diode, S5277B
D23	87-027-475-01	Zener diode, HZ-6B1
SFR1	87-021-480-01	Semi-fixed resistor, 50kΩ-B
PIN-15	82-481-647-01	Pin, 4P
		< Resistors >
⚠ R89,90	87-029-083-01	10Ω ½W Fuse resistor (C,G model)
⚠ R23	87-029-094-01	15Ω ½W Fuse resistor
≪METER CIRCUIT BOARD SECTION≫		
PCB-D	82-155-603-11	Meter circuit board
IC901	87-027-351-01	IC, LB-1416
D103~106	88-051-060-01	Diode, 1N60
D901,902	82-561-614-01	LED, TLR-205
D903,904,905	87-029-679-01	LED, TLR-208
PL1,2	82-155-663-01	Meter lamp, 8V 100mA
SFR105,106	87-021-564-01	Semi-fixed resistor, 1kΩ-B
PIN-21	87-032-914-01	Pin, 4P
		< Capacitors >
C155,156	87-015-453-01	2.2μF 25V Electrolytic BP
C157,158	87-015-464-01	4.7μF 16V Electrolytic BP
≪DME CIRCUIT BOARD SECTION≫		
PCB-E	82-155-612-01	DME circuit board (H,C,G model)
PCB-E	82-155-686-01	DME circuit board (U,BU model)
IC1	82-397-642-11	IC, DM-101A
≪RX CIRCUIT BOARD SECTION≫		
PCB-F	82-155-682-01	RX circuit board
IC1	87-027-629-01	IC, 4558DX
IC2	87-027-435-01	IC, MC-4069
IC3	87-027-704-01	IC, M50111P
IC4	87-027-564-01	IC, CMOS TC4011BP
IC5	87-027-657-01	IC, TC4028BP
Q1	89-318-445-01	Transistor, 2SC1844(E)
Q2,4~9	89-309-455-61	Transistor, 2SC945L(PQ)
Q3	89-107-335-01	Transistor, 2SA733(K)
D1~4	87-027-097-01	Diode, 1S1555
D5	87-027-366-01	PIN diode, M133HLF AW
X1	87-008-191-01	Ceramic, SFB-455R
PIN-22	87-032-903-01	Pin, 3P
PIN-20	87-032-908-01	Pin, 8P
	87-049-001-01	Pin, 3P

Symbol No.	Part No.	Description
		< Resistor >
R1	87-025-286-01	22kΩ ¼W ±1% Metal film resistor
≪SWITCH CIRCUIT BOARD-1 SECTION≫		
PCB-G	82-155-611-01	Switch circuit board-1 (H,C,G model)
PCB-G	82-155-685-01	Switch circuit board-1 (U,BU model)
S15	82-318-615-01	Lever switch (MEMORY)
≪SWITCH CIRCUIT BOARD-2 SECTION≫		
PCB-H	82-155-610-01	Switch circuit board-2 (H,C,G model)
PCB-H	82-155-684-01	Switch circuit board-2 (U,BU model)
S24	87-031-502-01	Rotary switch (TIMER/REPEAT)
PIN17,18	87-032-903-01	PIN, 3P
PIN16	87-032-904-01	PIN, 4P
PIN19	87-032-908-01	PIN, 8P
≪TAPE/CHANNEL SWITCH CIRCUIT BOARD SECTION≫		
PCB-J	82-155-618-11	Tape/channel switch circuit board
D1,10,11,12 13,15	82-155-661-01	LED, TLG-205S
D14	82-561-614-01	LED, TLR-205
S4~11, D2~9	87-031-558-01	Push-switch w/LED (MEMORY 1~4, TAPE SELECTOR)
S12~14	87-031-557-01	Push-switch (COMPU BRAIN, MEMORY IN, START)
≪LOGIC CIRCUIT BOARD SECTION≫		
PCB-K	82-155-620-11	Logic circuit board
D1	87-027-636-01	LED, TLR-226
D2	87-027-637-01	LED, TLG226
D3	87-027-638-01	LED, TLY226
S17~23	87-031-556-01	Push-switch (Logic control switch)
≪BIAS LED CIRCUIT BOARD SECTION≫		
PCB-L	82-155-619-11	Bias LED circuit board
D1	87-027-636-01	LED, TLY226
≪VOLUME CIRCUIT BOARD-1 SECTION≫		
PCB-M	82-155-606-11	Volume circuit board-1 (H,C,G model)
PCB-M	82-155-679-01	Volume circuit board-1 (U·BU model)
VR2	82-155-643-01	Volume, 10kΩ-A (OUTPUT LEVEL)
≪VOLUME CIRCUIT BOARD-2 SECTION≫		
PCB-N	82-155-604-11	Volume circuit board-2 (H,C,G model)
PCB-N	82-155-678-01	Volume circuit board-2 (U,BU model)
VR1	82-155-644-01	Volume, 20kΩ-A (RECORD LEVEL)
≪VOLTAGE SELECTOR CIRCUIT BOARD SECTION≫ = H,G model only		
⚠ PCB-P	82-154-609-11	Voltage selector circuit board

Symbol No.	Part No.	Description
⚠ S30	87-031-551-01	Rotary switch (VOLTAGE SELECTOR) (H model)
⚠ S30	87-031-542-01	Rotary switch (VOLTAGE SELECTOR) (G model)
⚠ F1	87-035-219-01	Fuse, T500mA (G model)
	87-098-013-01	Fuse label, T500mA (G model)
⚠	87-033-147-01	Fuse clamp (G model)
		< Capacitor >
⚠ C1	87-019-104-01	0.01μF Line capacitor
≪MISCELLANEOUS≫		
⚠ T1	82-155-631-01	Power transformer (H,G model)
⚠ T1	82-155-630-01	Power transformer (C model)
⚠ T1	82-155-628-01	Power transformer (U,BU model)
RH,PH	82-155-615-01	RH,PH combination head
EH	87-046-173-01	Erase head
M1	82-154-621-01	Motor, DC-FG
M2	82-319-617-01	Motor, DC-EG
SOL1	82-319-615-11	Solenoid (FWD)
SOL2	82-304-640-11	Solenoid (FR)
PL	82-155-664-01	Pilot lamp, 8V 80mA
⚠ CP1	87-019-098-01	Compound capacitor 0.033μF+120Ω (C model)
⚠ CP1	87-028-036-01	Compound capacitor 0.033μF+120Ω (U,BU model)
LM1,2	82-155-638-11	Level meter
J7	82-155-641-01	Jack, 6.3φ (PHONES)
J9	87-049-006-01	Jack, 2.5φ (PLAYER SYNC)
VR3	82-155-665-01	Volume, 10kΩ-B (BIAS FINE ADJUST)
S26,27	87-031-610-01	Micro switch (Erase prevention, CrO_2 detection)
S25	82-319-613-01	Micro switch (Cassette detection)
⚠ S29	87-031-467-01	Push-switch (POWER) (H,G model)
⚠ S29	87-031-520-01	Push-switch (POWER) (C,U model)
⚠	87-033-140-01	Solderless terminal (C,U,BU model)
⚠	87-034-826-01	AC cord (H model)
⚠	87-034-951-01	AC cord (C,U,BU model)
⚠	87-034-892-01	AC cord (G model)
⚠	87-085-165-01	Cord bushing (H,C,U,BU model)
⚠	87-085-166-01	Cord bushing (G model)
CON-18	82-155-635-01	Connector ass'y, 3P
CON-17	82-155-636-01	Connector ass'y, 3P
CON-4	82-155-648-01	Connector ass'y, 3P
CON-10	82-155-653-01	Connector ass'y, 3P
CON-22	82-155-687-01	Connector ass'y, 3P
CON-16	82-155-634-01	Connector ass'y, 4P
CON-15	82-155-649-11	Connector ass'y, 4P
CON-6	82-155-659-01	Connector ass'y, 4P
CON-21	82-155-674-01	Connector ass'y, 4P
CON-2	82-155-672-01	Connector ass'y, 4P
CON-7	82-155-658-11	Connector ass'y, 5P
CON-5	82-155-647-01	Connector ass'y, 6P
CON-9	82-155-652-01	Connector ass'y, 6P
CON-14	82-155-656-01	Connector ass'y, 6P
CON-11	82-155-657-01	Connector ass'y, 6P
CON-8	82-155-655-01	Connector ass'y, 7P
CON-19	82-155-688-01	Connector ass'y, 8P
CON-20	82-155-689-01	Connector ass'y, 8P

Symbol No.	Part No.	Description
CON-12	82-155-654-01	Connector ass'y, 9P
CON-13	82-155-651-01	Connector ass'y, 12P

⚠ This symbol is given to important parts which serve to maintain the safety of the product, and which are made to conform to special safety specifications. Therefore, when replacing a component with this symbol, make absolutely sure that you use a designated part.

MEMO

SCHEMATIC DIAGRAM –1

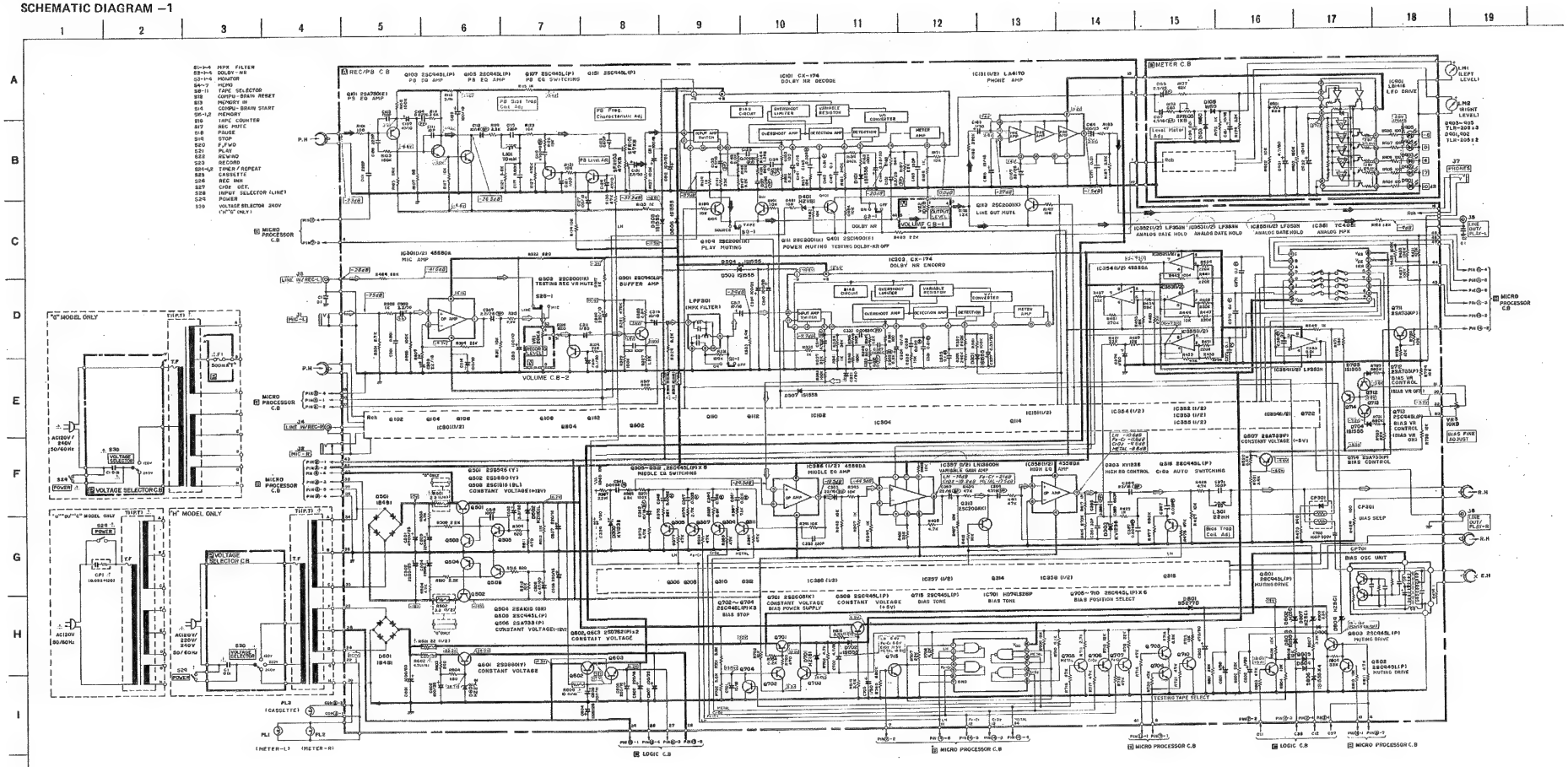

AD-M800H,C,U,BU,G AD-M800H,C,U,BU,G

AIWA

SCHEMATIC DIAGRAM –2

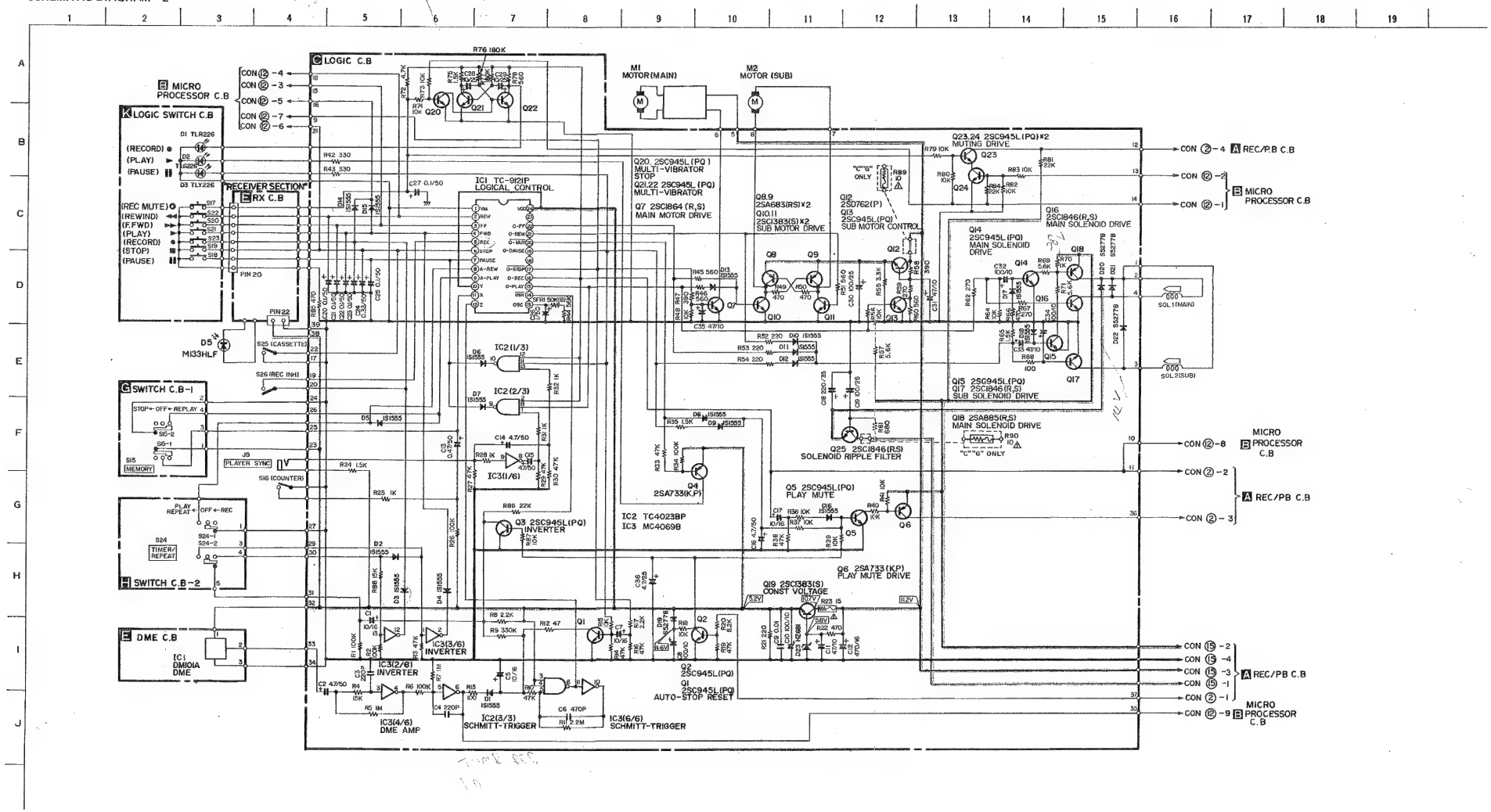

SCHEMATIC DIAGRAM –3

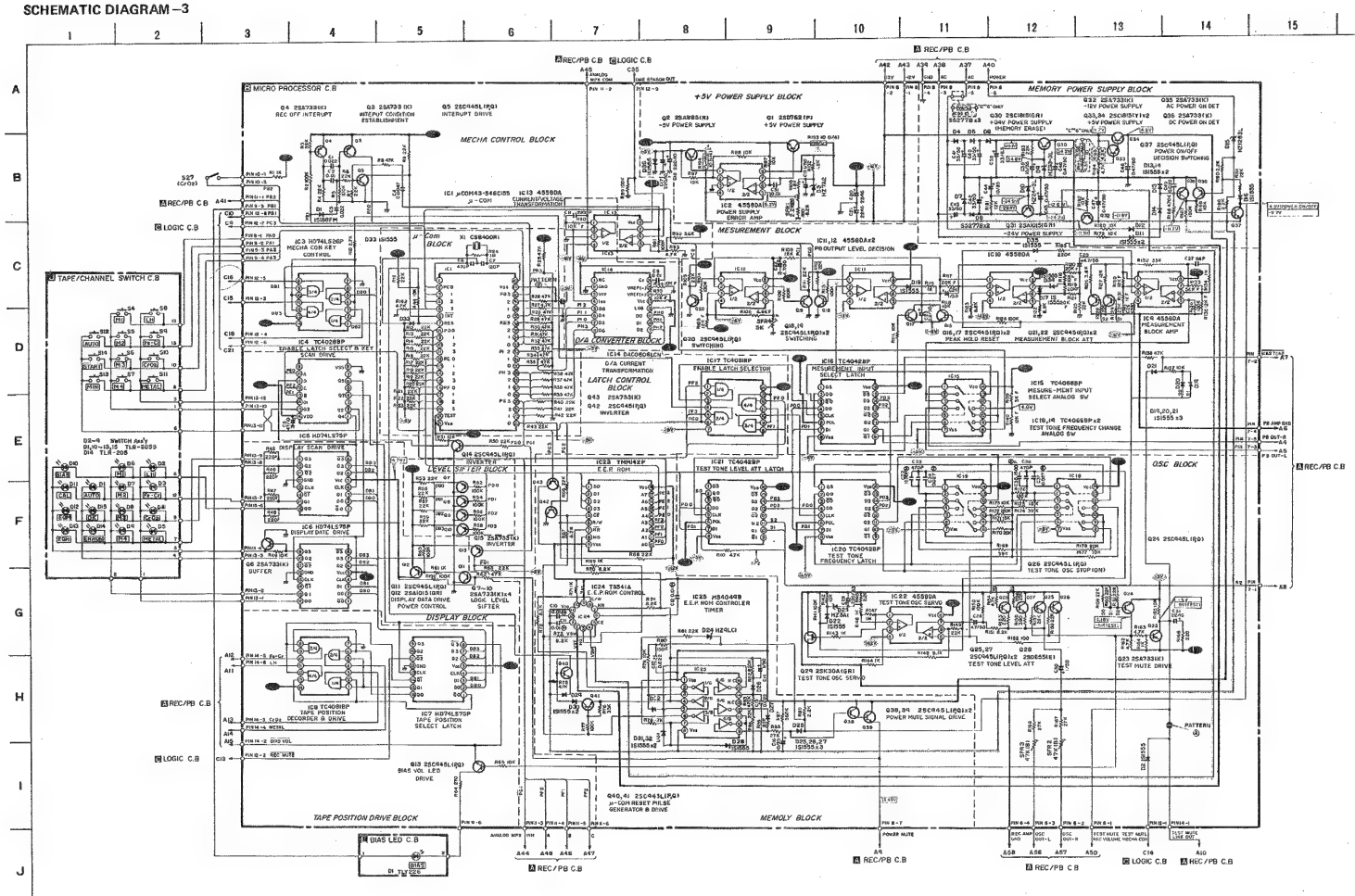

NOTES:

1) ▬ B (+) power supply ▬ B (–) power supply
2) ➡ Signal path
   ⇨ Rec path
3) The voltage is the reference value measured with a tester (20 k-ohms/V DC) when there are no signals.
   But ( ) is with recording.
   An asterisk (*) indicates that the value was measured with a vacuum-tube voltmeter during recording.
4) Resistors with no designation have a rated power of ¼W and a tolerance of ±5%.
5) Capacitors with no designation have a dielectric strength of less than 50WV.
6) The only capacitor tolerances indicated are ±5% (J) and ±10% (K).
7) Ceramic capacitor symbols:
   For temperature compensation (SL)
   High dielectric constant system (YY)
   High dielectric constant system (YW, YP, YZ)
8) Explanation of symbols
   (M) Mylar capacitor
   (A) Aluminum solid capacitor
   (PP) Polypropylene film capacitor
   (BP) Bi-polarized capacitor
   (LL) Low-leakage capacitor
   (T) Tantalum capacitor
   Fuse resistor
   ⚠ Safety component symbol
   This symbol is given to important parts which serve to maintain the safety of the product, and which are made to conform to special safety specifications. Therefore, when replacing a component with this symbol, make absolutely sure that you use a designated part.

• This schematic diagram is subject to change without notice in the interests of improved performance.

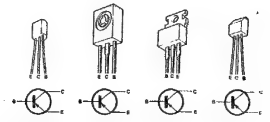

2SA683
2SA733
2SA750
2SA1015

2SA885

2SB596

2SB605

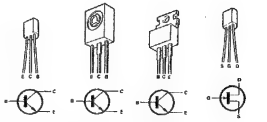

2SC945
2SC1383
2SC1400
2SC1815
2SC2000
2SD655
2SC1844

2SC1846

2SD762
2SD880

2SK30A

WIRING–1

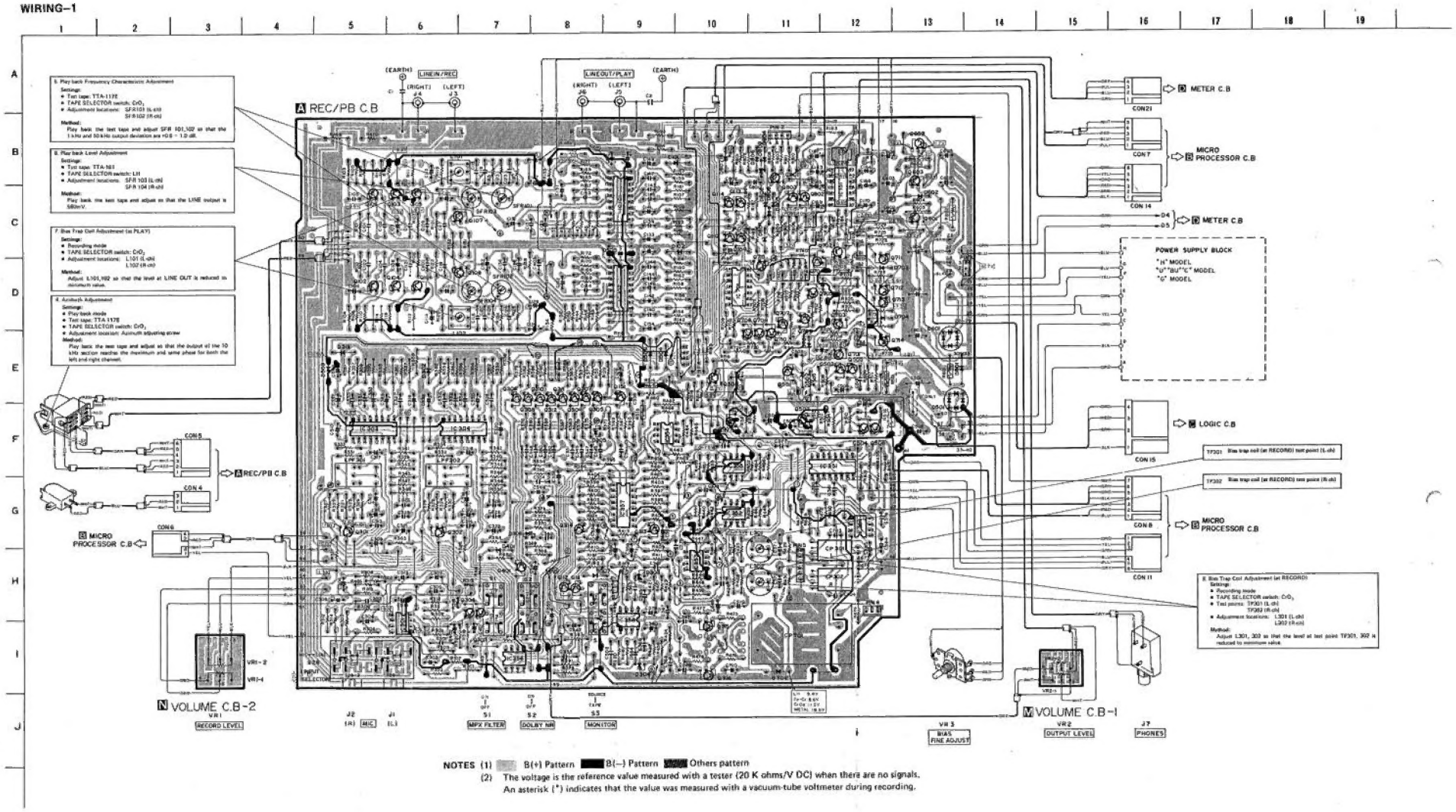

NOTES (1) B(+) Pattern B(−) Pattern Others pattern

(2) The voltage is the reference value measured with a tester (20 K ohms/V DC) when there are no signals.
An asterisk (*) indicates that the value was measured with a vacuum-tube voltmeter during recording.

WIRING–2

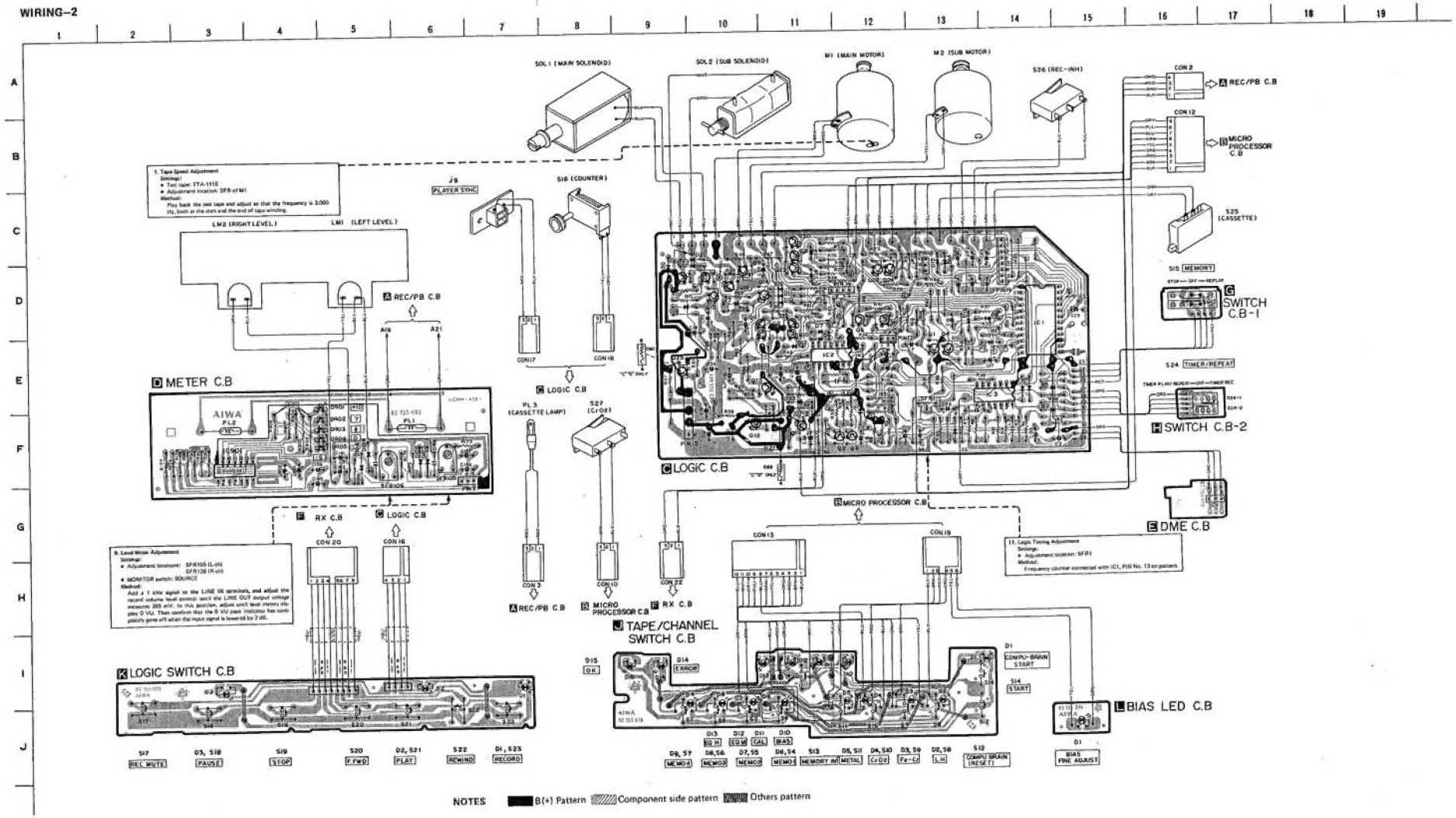

NOTES ■ B(+) Pattern ▨ Component side pattern ▨ Others pattern

WIRING–3

B MICRO PROCESSOR C.B

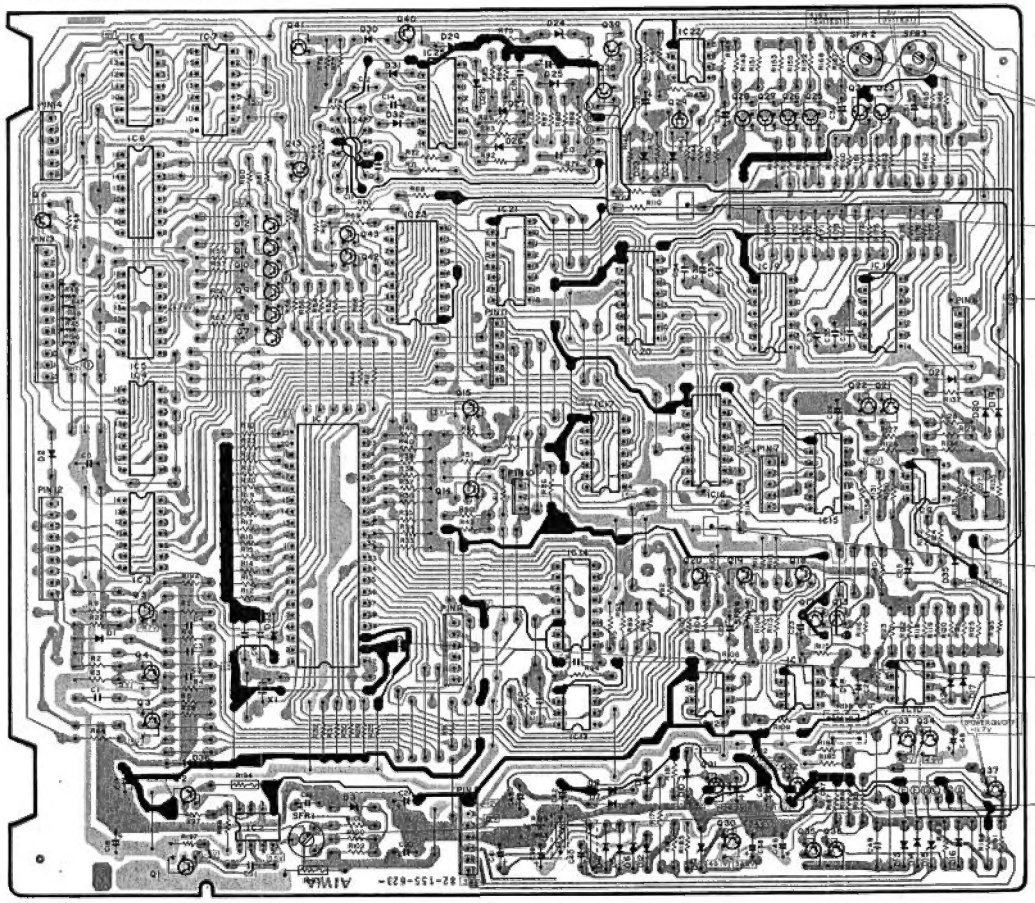

3. CR Oscillator Level Adjustment

Settings:
Join test points TP-1 & TP-2 with 1.8 kohms resistor to supply +B to the oscillator circuit.
- Open pattern A
- MONITOR switch: SOURCE
- Test point: Line out jacks
- Adjustment locations: SFR2 (L-ch)
  SFR3 (R-ch)

Method:
Adjust so that the output at LINE OUT is 39.5 mV.
Note: After adjustment, short pattern A

TP2 Oscillation level test point

Pattern A (short by soldering after adjustment)

10. Memorization of Standard Data Adjustment

Settings:
Open pattern B
Test tapes: CrO_2 ..... TTA-119G
METAL TTA-119M
Fe-Cr TTA-119E
LH TTA-119J

Method:
Begin from CrO_2 in above order. Select the tape selector button and press the DATA Reset button, then press the start button. After confirming that the automatic adjustment is completed and OK indicator has lit, repeat the above operation. This will make fine automatic adjustment (memorization). Perform for each test tape.
Note: After adjustments, short pattern B.

TP1 Power supply voltage test point

Pattern B (short by soldering after adjustment)

2. Power Supply Voltage Adjustment

Settings:
- Test point: TP1
- Adjustment location: SFR1

Method:
Adjust so that the voltage between test point and ground is 5.00 ± 0.03V.

NOTES (1) B(+) Pattern B(−) Pattern Others pattern
(2) The voltage is the reference value measured with a tester (20 K ohms/V DC) when there are no signals.

WIRING-4

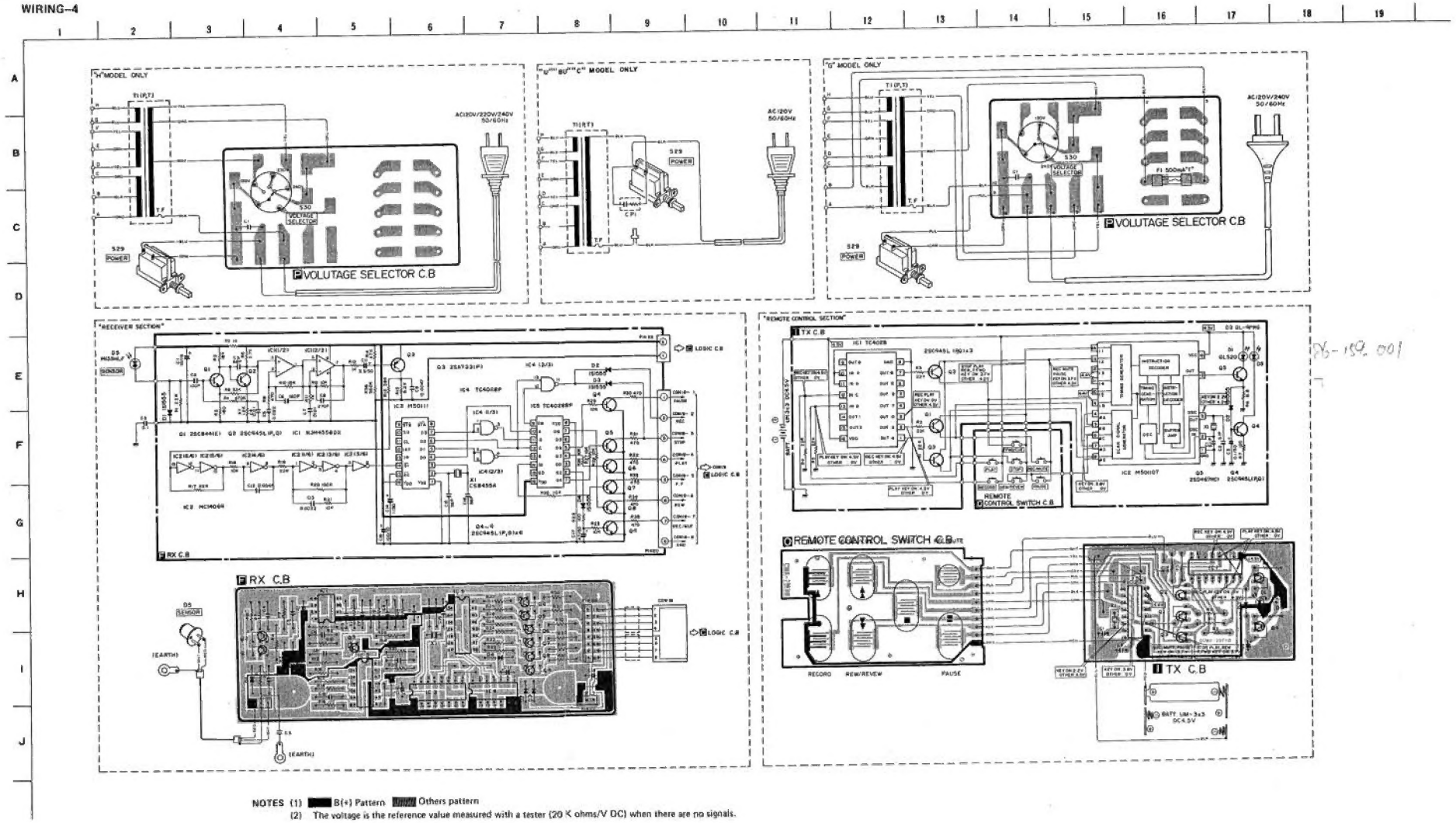

NOTES (1) B(+) Pattern Others pattern
(2) The voltage is the reference value measured with a tester (20 K ohms/V DC) when there are no signals.